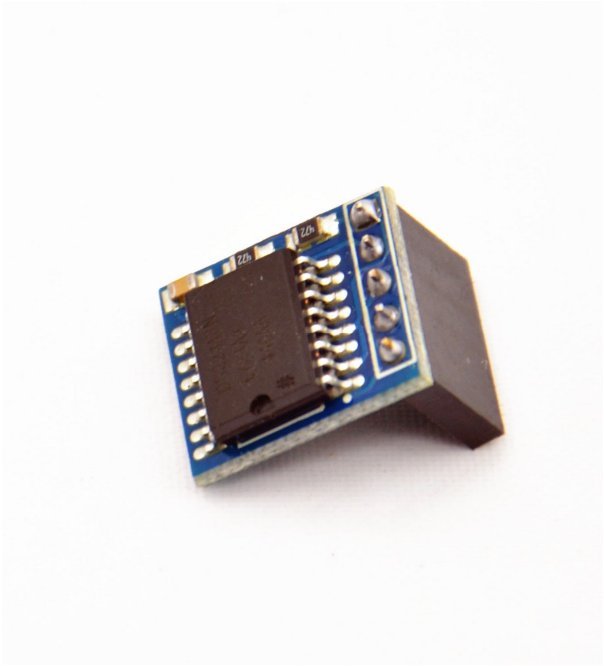

Banana Pi Expansion Module User Manual

BPI-RTC

Maximum Power at Minimum Size

www.banana-pi.com

Banana Pi RTC Expansion Module User Manual

Directory

Directory 2

1：Product Specification： 5

2：Produce Overview： 6

3：Produce Features： 6

4：Port： 6

5：Product Parameters： 7

6：Typical Application： 7

7：How to use： 7

8：More information： 8

8.1：Schematic diagram： 8

8.2：Testbench： 9

Shenzhen SINOVOIP CO., LIMITED Copyright Statement:

More information:

Get more product and support please contact Shenzhen SINOVOIP CO.,LIMITED (www.banana-pi.com)

Attention:

Due to technical requirements components, please do not hand directly connected
Touch. Core board and development system contains static-sensitive devices. Quiet Electrical charge easily accumulate in the human body and the device can not detect possible Damage to equipment, it is recommended to take anti-static measures, it is recommended not to hand. Touch, stored in anti-static effect devices.

Banana Pi Expand Module Serial：

Infinity cascade IO expand module：

This module is designed specifically for the Banana Pi IO expansion modules. The module expand 32 IO, Multiple modules can cascade, infinity cascade， infinity GPIO.

I2C GPIO expand module：

This module is designed specifically for the Banana Pi IO expansion modules. The Module use I2C bus to connect to Banana Pi. The module expand 8 Bidirectional GPIO and wit isolation protection function which can effectively excessive external voltage. There are 8 I2C address, you can choose one of them through setup the jumper. Multiple modules can cascade and maximum cascade 8 modules!

Prototype development module：

The Prototype development module is designed specifically for the Banana Pi. The module suitable enthusiasts and user can weld peripheral to the module； The module expand some amphenol connector and some SMT, so the user can finish prototype test easily.

Berryclip expand module：

The BerryClip module is designed specifically for learning how to use the GPIO of Banana Pi. There are 6 multiple color LED, 1 button and 1 Buzzer on the module.

Berryclip(DIY) expand module：

The module is not the end product, you need weld them by yourself. The function of the module is the same as BerryClip module.

UNO compatibility module：

The module makes Banana Pi compatible with Arduino Uno and many Arduino Shields. The module's GPIO is the same as Arduino Uno and you can choose the voltage of GPIO between 5V or 3V through setup jumper.

T Electric level convert module：

The module expand the GPIO of Banana Pi to breadboard. It convert 3.3V electric to 5V electric level, then the Banana Pi can connect many 5V electric level peripheral.

IO extraction module：

The module expand all of GPIO of Banana Pi to breadboard.

RTC expand module:

The RTC module is specifically designed for Banana Pi. There is a 0.2uF SuperCapacitor on the board to keep the real time for a long time after the Banana Pi has power off.

AD/DA expand module:

The AD/DA module is specifically designed for Banana Pi. There is 8bit high resolution DAC and ADC on one chip.

I2C electric level conversion expand module:

The I2C electric level conversion module is specifically designed for Banana Pi. The module convert the 3.3V of I2C electric level to 5V level or convert 5V to 3.3V.

I2C electric level conversion expand module:

The Serial Port module is specifically designed for Banana Pi. The module use Maxim MAX232 chip and DB9 port. So the user don't need to connect Dupont Line and that avoid wrong wiring. User can use this module to debug Banana Pi easily.

1： Product Specification：

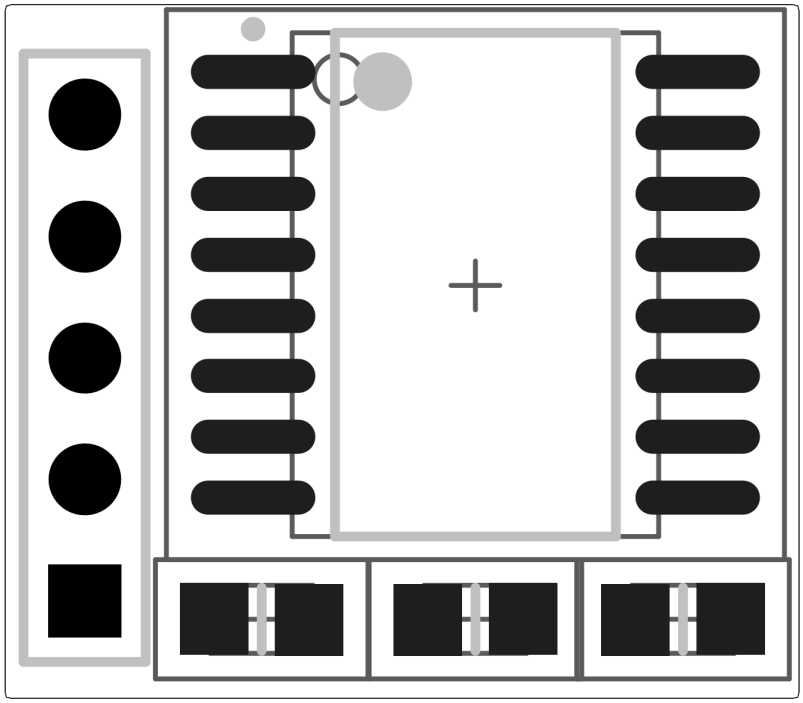

2： Produce Overview：

The RTC module is specifically designed for BananaPi. It communicated with BananaPi through I2C bus. There is a Maxim DS3231 and 0.2uF SuperCapacitor on the board to keep the real time for a long time after the BananaPi has power off.

3： Produce Features：

- Use Maxim DS3231 chip
- 0.2uF Super Capacitor
- Can be operated by a shell

4： Port：

- Banana Pi connection port

5： Product Parameters：

- Accuracy ±2ppm from 0°C to +40°C
- Battery Backup Input for Continuous Time keeping
- Real-Time Clock Counts Seconds, Minutes,Hours, Day, Date, Month, and Year with Leap Year Compensation Valid Up to 2100
- Digital Temp Sensor Output: ±3°C Accuracy
- Two Time-of-Day Alarms

6： Typical Application：

- Smart home
- Utility Power Meters
- Telematics
-

7： How to use：

Just insert the module to Banana Pi, like the below picture:

8： More information：

The DS3231 is a low-cost, extremely accurate I2C realtime clock (RTC) with an integrated temperature compensated crystal oscillator (TCXO) and crystal. The device incorporates a battery input, and maintains accurate timekeeping when main power to the device is interrupted. The integration of the crystal resonator enhances the long-term accuracy of the device as well as reduces the piece-part count in a manufacturing line. The DS3231 is available in commercial and industrial temperature ranges, and is offered in a 16-pin, 300-mil SO package.

The RTC maintains seconds, minutes, hours, day, date,month, and year information. The date at the end of the month is automatically adjusted for months with fewer than 31 days, including corrections for leap year. The clock operates in either the 24-hour or 12-hour format
with an AM/PM indicator. Two programmable time-of day alarms and a programmable square-wave output are provided. Address and data are transferred serially through an I2C bidirectional bus.

A precision temperature-compensated voltage reference and comparator circuit monitors the status of VCC to detect power failures, to provide a reset output, and to automatically switch to the backup supply when necessary. Additionally, the RST pin is monitored as a pushbutton input for generating a µP reset.

8.1： Schematic diagram：

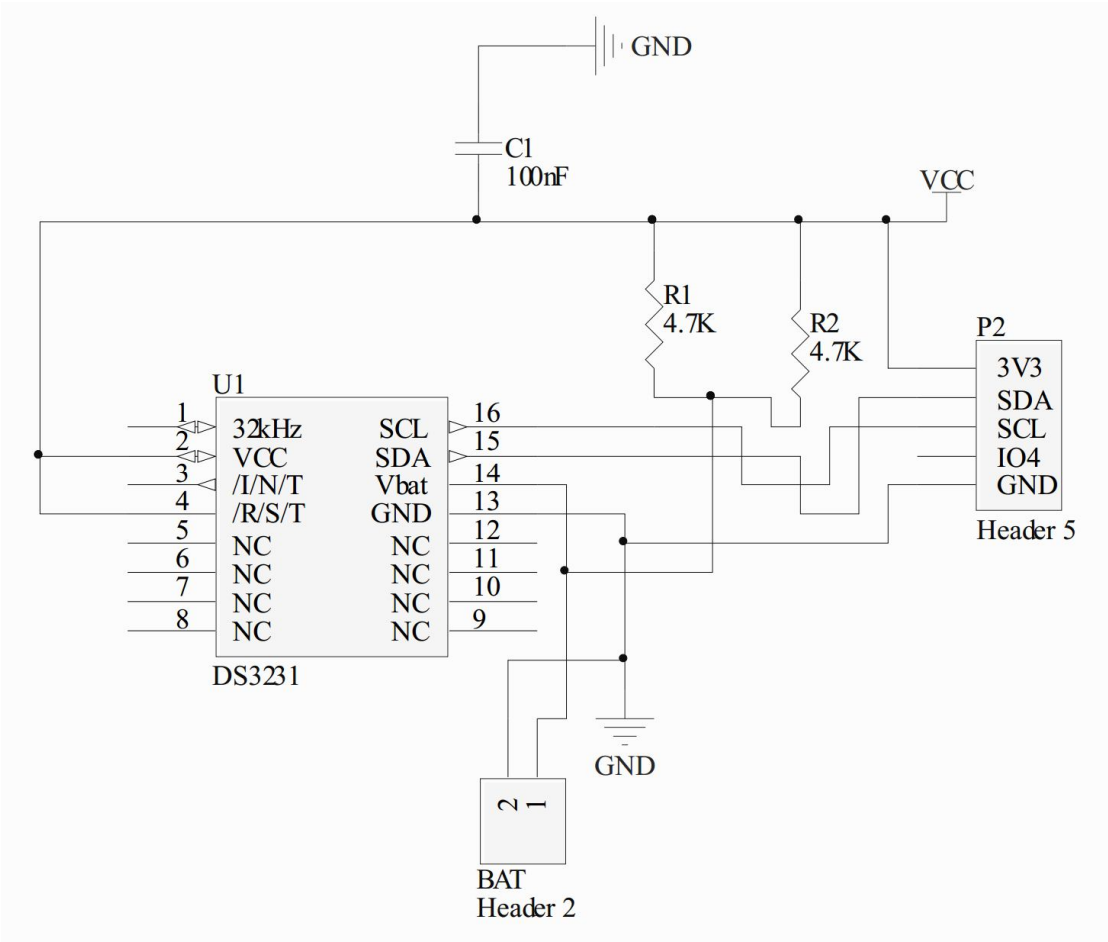

More information please check：

http://www.nxp.com/products/interface_and_connectivity/i2c/i2c_dacs_and_adcs/PCF8591T.html

8.2：Test bench：